CHEM1101 Answers to Problem Sheet 3

1. **As 1 eV = 1.602 × 10^{-19} J, the kinetic energy = T = 100 eV = 1.602 × 10^{-17} J. Rearranging the equation for the kinetic energy in terms of the momentum gives and substituting in the value of the electron mass, m_e, gives:**

$$p = \sqrt{2m_e \times T}$$
$$= \sqrt{2 \times (9.109 \times 10^{-31}\ \text{kg}) \times (1.602 \times 10^{-17}\ \text{J})} = 5.402 \times 10^{-24}\ \text{kg m s}^{-1}$$

As the momentum $p = mv$, the electron velocity is:

$$v = \frac{p}{m_e} = \frac{(5.402 \times 10^{-24}\ \text{kg m s}^{-1})}{(9.109 \times 10^{-31}\ \text{kg})} = 5.93 \times 10^{6}\ \text{m s}^{-1}$$

From de Broglie's relationship, the wavelength associated with a particle of momentum p is:

$$\lambda = \frac{h}{p} = \frac{(6.626 \times 10^{-34}\ \text{J s})}{(5.402 \times 10^{-24}\ \text{kg m s}^{-1})} = 1.23 \times 10^{-10}\ \text{m} = 1.23\ \text{angstroms}$$

2. **The energy levels get closer and closer together as n increases so the *biggest* gap is between the n = 1 and n = 2 levels.**

Helium has Z = 2. The energy of the n = 1 and n =2 levels are:

$$E_1 = \frac{-E_R (2)^2}{(1)^2} = -4E_R \text{ and } E_2 = \frac{-E_R (2)^2}{(2)^2} = -E_R$$

The energy separation is $3E_R$ = 3 × (2.18 × 10^{-18} J) = 6.54 × 10^{-18} J

3. .

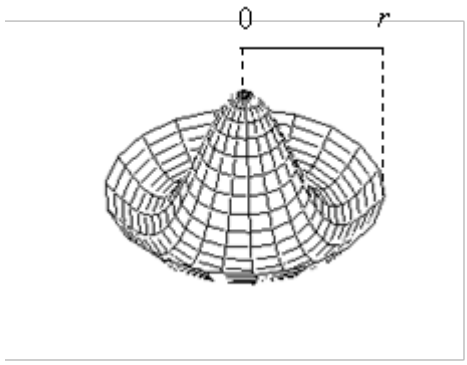

Radial part:

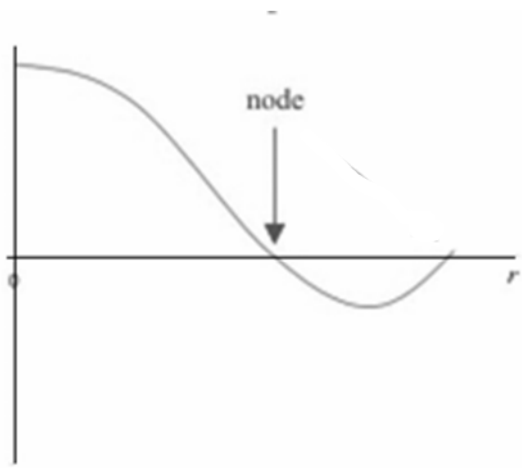

4.

Orbital	n	l	m_l
4*d*	4	2	-2, -1, 0, 1, 2
1*s*	**1**	**0**	**0**
3*p*	**3**	**1**	**-1, 0, 1**
5*d*	**5**	**2**	**-2, -1, 0, 1, 2**

5.

2*p*:

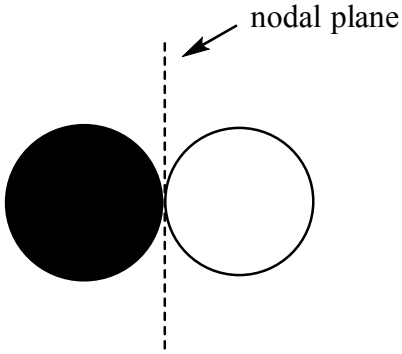

3*p*:

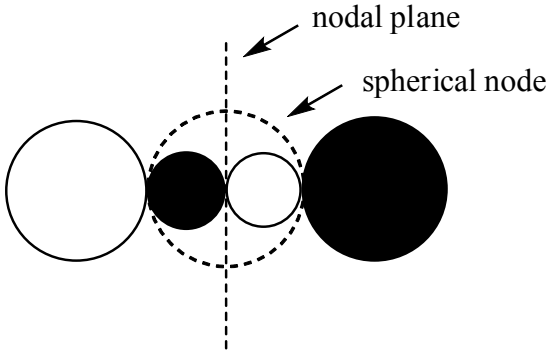

6. (a) O **[He]$2s^2 2p^4$** **[He]** ↑↓ ↑↓ ↑ ↑

(b) Ga **[Ar]$4s^2 3d^{10} 4p^1$** **[Ar]** ↑↓ ↑↓ ↑↓ ↑↓ ↑↓ ↑↓ ↑

(c) Fr **[Rn]$7s^1$** **[Rn]** ↑